Western Integrated Materials, Inc.
562.634.2823
www.Western-Integrated.com
www.AluminumDoorFrames.com
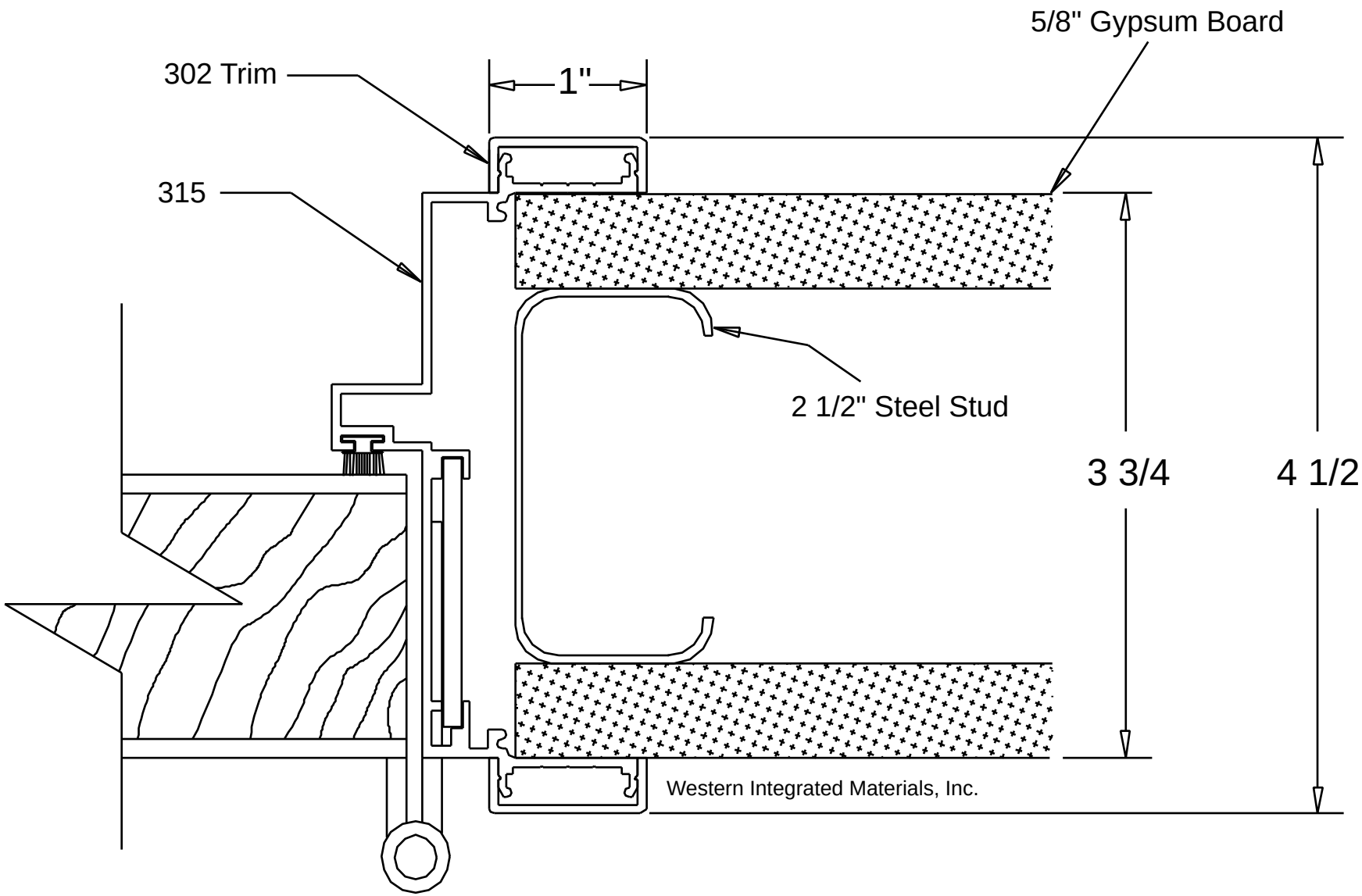
3-3/4 Door Frame Hinge Side Detail
with 1" Standard Trim